Salsco, INC.
LEADER BY DESIGN

MADE IN THE U.S.A

OPERATORS AND PARTS MANUAL
84 SERIES CHIPPERS

09/07

MANUFACTURER OF OUTDOOR POWER EQUIPMENT
Products for Turf & Lawncare, Rental Construction, Tree Care, Wood Processing, Nursery & Farm Industries
Other Salsco Equipment:

3-1/2" - 18", Gas, Diesel, and P.T.O. Wood/Brush Chippers
Chipper Shredder Vacuum - Tailgate & Truckloader Vacuums, Strawblowers, Slicer Seeders
Shaving Mills - Gas & Electric Greens Rollers

Quality of Workmanship, Innovative Design, Built to Last!

105 School House Road
Cheshire, CT 06410 U.S.A.
800-872-5726, 203-271-1682, 203-271-2596 (Fax)
sales@salsco.com, www.salsco.com

TABLE OF CONTENTS

MODEL (S) 8416B, 8416K, 8420K, 8425K

COVER & TABLE OF CONTENTS…….……..Pages 1 – 2

STATEMENT OF FACT ……..……...……..…… Page 3

SPECIFICATIONS & FEATURES ……..……...……..…….Page 4

MACHINE REGISTRATION ……....…….Page 5

ANSI SAFETY & OPERATING INSTRUCTIONS …….....…..…….Pages 6 – 7

OPERATING INSTRUCTIONS .....….....…..... Page 8

SERVICE SCHEDULE.....……...……..……Pages 9

PARTS DIAGRAMS …….…….……..…Pages 10 – 16

TORQUE CHARTS …….....…….……Page 17

WARRANTY POLICY/PROCEDURE ……...…….…….……...Page 18

COPYOF WARRANTY CLAIM FORM….……...…….…….…...Page 19

SERVICE SCHEDULE LOG ……....……...Page 20

SALSCO, INC.
105 School House Road
Cheshire, CT 06410
800-872-5726, 203-271-1682
203-271-2596 (Fax)
www.salsco.com, sales@salsco.com

STATEMENT OF FACT

You have just purchased the highest quality, most dependable, Chipper on the market today. This unit has the ability to meet exact standards and perform for years with minimum downtime. HOWEVER, it cannot read nor will it understand this manual no matter how long you leave it on top of the machine.

It is your responsibility to read and understand this manual; it is also your responsibility to be certain this information is passed along to anyone who is expected to operate this equipment. Should you choose not to read, understand and pass along the information provided you, please expect equipment failure and possible injuries to persons around this equipment.

For the safety of the operator, it is **imperative** that this manual is carefully read and understood.

Once you have read this manual, it is your responsibility to be sure that all new operators read and understand this manual, especially all cautions stated.

As a manufacturer of equipment, we have a responsibility to design a safe piece of equipment. NOTE: The important safeguards and instructions in this manual are not meant to cover all possible conditions and situations that may occur. It must be understood that common sense, caution, and care are factors, which cannot be built into any product. These factors must be supplied by the person(s) caring for and operating this equipment.

ONLY YOU CAN PREVENT ACCIDENTS!!

SPECIFICATIONS AND FEATURES

The Salsco 84 Series Wood Chippers, like all of Salsco products, are ruggedly built to withstand high volume usage by the golf course; farmer, rental store, homeowner and tree care industries. The complete hydraulic system is self-contained to operate the hydraulic power feed. Orange polyester powder coat paint offers protection against ultra violet discoloration, outdoor weatherability and resists most chemicals.

These units have an in feed opening of 4" x 8" to eliminate most pruning of limbs. It will handle Christmas trees, palm fronds, vines and leafy material, with ease. Two bed knives assure the cutting of smaller diameter material into short more desirable pieces. To prevent material such as palm fronds and vines from wrapping around the feed roll, this unit comes equiped with both a vertical and horizontal bed knife. In addition, we have welded in scraper bars, which clean excess material off the roll. Our standard feed roll has welded blades and it measures 7" in diameter by 8" long. Speed of the hydraulic feed is easily adjusted at the hydraulic pump and can be controlled by the control bar positioned at the top of the chipper chute to forward/off/reverse. The chipper disc is 3/4" thick by 18-7/8" diameter and mounted on a 1" diameter steel shaft with six exhaust blades.

Simple and safe operation; easy to maintain, and built to last!

Salsco, 84 Series, Wood/Brush Chippers

MACHINE REGISTRATION

MANUFACTURED BY:

SALSCO, INC.
105 School House Rd., Cheshire, CT 06410
800-872-5726, 203-271-1682, 203-271-2596 (Fax)
sales@salsco.com www.salsco.com

THIS MANUAL COVERS MODEL (s): _____, _____

This company reserves the right to discontinue, add improvements to, or change the design of any model or product at any time without obligation to improve existing machines, either by changing the design or adding new parts.

It has been and will continue to be the policy of SALSCO to update existing machines at its own discretion. Whenever possible, new designs will be made in such a way that they can be "Retro Fit" if so desired.

Record in the space provided below the model and serial number of this unit. Please retain these numbers for future reference.

No parts orders will be accepted **WITHOUT MODEL NUMBERS OR PART NUMBERS.** All part numbers are listed in this manual.

_____ _____

Serial Number Model Number

NOTE: Be sure to complete your warranty card. This will insure immediate processing of any warranty claims.

READ AND UNDERSTAND THIS MANUAL BEFORE STARTING THE MACHINE

1/06

BRUSH CHIPPERS
ANSI Z133.1-2006
American National Standard for Arboricultural Operations
Safety Requirements

5.3 Brush Chippers

5.3.1 The items contained in section 5.1 shall always be included in the review of this section.

5.3.2 Access panels (for example, guards) for maintenance and adjustment, including discharge chute and cutter housing, shall be closed and secured prior to starting the engine of brush chippers. These access panels shall not be opened or unsecured until the engine and all moving parts have come to a complete stop (see Annex C, General Safety Procedures That Apply to All Tree Work).

5.3.3 Rotary drum or disc brush chippers not equipped with a mechanical infeed system shall be equipped with an infeed hopper not less than 85 inches (2.15 m) measured from the blades or knives to ground level over the center line of the hopper. Side members of the infeed hopper shall have sufficient height so as to prevent workers from contacting the blades or knives during operations.

5.3.4 Rotary drum or disc brush chippers not equipped with a mechanical infeed system shall have a flexible anti-kickback device installed in the infeed hopper to reduce the risk of injury from flying chips and debris.

5.3.5 Chippers equipped with a mechanical infeed system shall have a quick-stop and reversing device on the infeed system. The activating mechanism for the quick-stop and reversing device shall be located across the top, along each side, and close to the feed end of the infeed hopper within easy reach of the worker.

5.3.6 Vision, hearing, and/or other appropriate personal protective equipment shall be worn when in the immediate area of a brush chipper in accordance with section 3.4, Personal Protective Equipment.

5.3.7 Arborists, mechanics, and other workers shall not, under any circumstances, reach into the infeed hopper when the cutter disc, rotary drum, or feed rollers are moving.

5.3.8 When trailer chippers are detached from the vehicles, they shall be chocked or otherwise secured in place.

5.3.9 When in a towing position, chipper safety chains shall be crossed under the tongue of the chipper and properly affixed to the towing vehicle.

5.3.10 See section 8.6, Brush Removal and Chipping, for additional requirements.

BRUSH REMOVAL AND CHIPPING
ANSI Z133.1-2006

American National Standard for Arboricultural Operations
Safety Requirements (Continued)

8.6 Brush Removal and Chipping

8.6.1 Traffic control around the jobsite shall be established prior to the start of chipping operations along roads and highways (see section 3.2, Traffic Control Around the Jobsite).

8.6.2 Brush and logs shall not be allowed to create hazards in the work areas.

8.6.3 To prevent an entanglement hazard, loose clothing, climbing equipment, body belts, harnesses, lanyards, or gauntlet-type gloves (for example, long-cuffed lineman's or welder's gloves) shall not be worn while operating chippers.

8.6.4 Personal protective equipment shall be worn when in the immediate area of chipping operations in accordance with section 3.4, Personal Protective Equipment, of this standard.

8.6.5 Training shall be provided in the proper operation, feeding, starting, and shutdown procedures for the chipper being used.

8.6.6 Maintenance shall be performed only by those persons authorized by the employer and trained to perform such operations.

8.6.7 Brush and logs shall be fed into chippers, butt or cut end first, from the side of the feed table center line, and the operator shall immediately turn away from the feed table when the brush is taken into the rotor or feed rollers. Chippers should be fed from the curbside whenever practical.

8.6.8 The brush chipper discharge chute or cutter housing cover shall not be raised or removed while any part of the chipper is turning or moving. Chippers shall not be used unless a discharge chute of sufficient length or design is provided that prevents personal contact with the blades (see Annex C, General Safety Procedures That Apply to All Tree Work).

8.6.9 Foreign material, such as stones, nails, sweepings, and rakings, shall not be fed into chippers.

8.6.10 Small branches shall be fed into chippers with longer branches or by being pushed with a long stick.

8.6.11 Hands or other parts of the body shall not be placed into the infeed hopper. Leaning into or pushing material into infeed hoppers with feet is prohibited.

8.6.12 While material is being fed into the chipper infeed hopper chute, pinch points continually develop within the material being chipped and between the material and machine. The operator shall be aware of this situation and respond accordingly.

8.6.13 When feeding a chipper during roadside operations, the operator shall do so in a manner that prevents him or her from stepping into traffic or being pushed into traffic by the material that is being fed into the chipper.

8.6.14 When using a winch in chipper operations, the operator shall ensure that the winch cable is properly stored before initiating chipper operations.

8.6.15 Refer to section 5.3, Brush Chippers, for additional information.

OPERATING INSTRUCTIONS

1. **BE SURE** all guards and covers are in place.
2. Check all chambers to be sure they are **FREE AND CLEAR** of debris.
3. Set direction of discharge chute.
4. Set feed handle in **NEUTRAL** position.
5. Start engine, bring up to **FULL R.P.M.**
6. Engage feed handle. **NOTE:** You will notice the more you pull the handle towards the rear of the machine, the faster the roll turns and when you push in the other direction the roll slows down.
7. With the feed roll turning slowly, place the first branch on the infeed table. **NOTE:** You should be standing, looking at the infeed hopper opening, as you place the branch in the feed roll. Turn to your left and exit the area. Go and get another branch, do not worry about the chipper, it will take care of itself. Should there be any wood left on the infeed tray, it will be taken care of by the next branch. **DO NOT REACH INTO THIS MACHINE FOR ANY REASON!**
8. When you are done chipping, close the infeed door and let the machine come down to an idle for a few minutes before shutting down.

HINTS:

1. When operating machine, stand off to the side of the feed hopper when feeding wood into the machine. **NEVER STAND DIRECTLY IN FRONT OF THE FEED HOPPER WHEN FEEDING WOOD INTO THE MACHINE.**

2. When using the chipper and you have a short piece of wood bouncing around and not being grabbed by the feed roll, **LEAVE IT! DO NOT TRY TO PUSH IT THROUGH WITH ARMS OR LEGS!** The next limb will push it through.

3. When through with the job, make sure all material is run through the machine before shutting it down. This will prevent any injuries from flying debris when the machine is started up at the next job.

REMEMBER! A CHIPPER WILL ONLY LET YOU MAKE A STUPID MISTAKE

SERVICE SCHEDULE

1. Grease all main bearings once a day. DO NOT OVER GREASE. Wipe extra grease off bearings.
2. Be sure to clean entire machine. Should it become necessary to remove the exhaust chute, to clean out the machine, make sure the key has been removed from the engine.
3. Sharpen/change chipper blades: Remove pin on impeller housing. Open impeller housing to expose impeller and chipper blades. DO NOT reach in and hold impeller with your hand, instead use a piece of 2" x 4" wood to push impeller housing. When you reassemble, be sure to use Locktite. We use Locktite, Blue 242, removable at the factory. It is also advisable to discard bolts and replace them with new bolts. Sharpen blades as you would sharpen a lawn mower blade, under angle edge only. Sharpen blades as evenly as possible. REMINDER! SALSCO, INC. has a blade sharpening service. Call SALSCO, INC. for full details, 800-872-5726.
4. Recommended Bed knife adjustment is .70 When adjusting bed knife, check the distance on all chipper blades. MAKE SURE all bolts are tightened properly after adjusting bed knife.
5. HINT: It is strongly recommended to have a set of blades and screws on the shelf, to prevent downtime while blades are being sharpened.
6. HINT: Blades need sharpening after approximately 8 - 15 hours of use.

SERVICE SCHEDULE	AS NEEDED	DAILY	WEEKLY	MONTHLY
CLEAN MACHINE	X	X		
GREASE DISC SHAFT BEARING	X	X		
SHARPEN CHIPPER BLADES	X OR		X	
CHECK & ADJUST BED KNIFE	X OR		X	
CHECK ALL NUTS & BOLTS	X	X		

CHECK ENGINE MANUAL FOR ENGINE MAINTENANCE SCHEDULE

NEVER, UNDER ANY CIRCUMSTANCES START THE ENGINE WHEN UNIT IS OPEN OR AT ANY TIME DURING SERVICE OR ROUTINE MAINTENANCE

DRAWING # 1

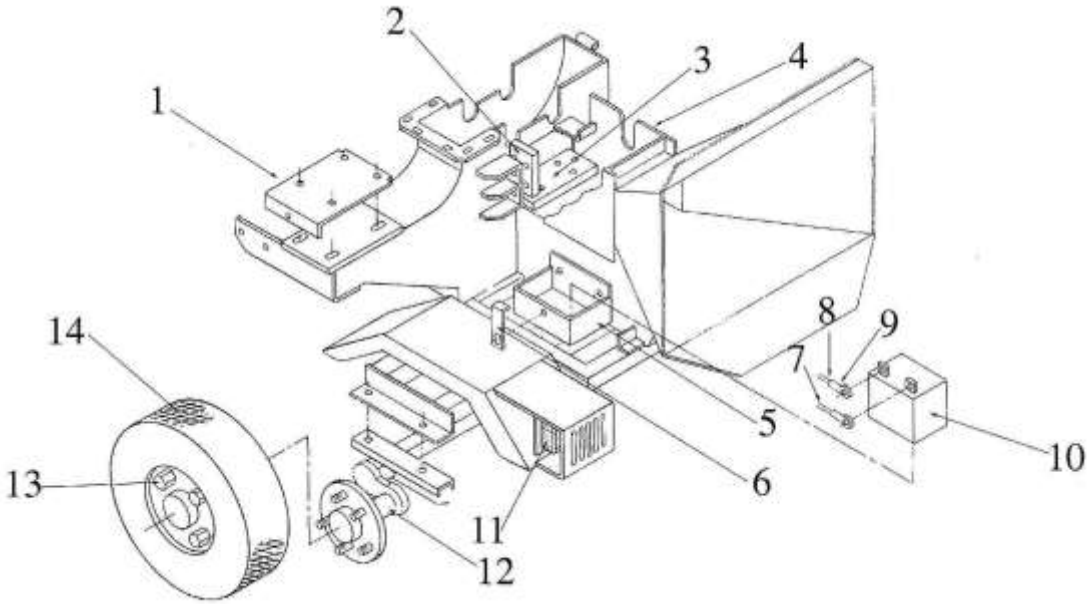

DRAWING # 1								
ITEM #	**DESCRIPTION**	**PART #**	**QTY**		**ITEM #**	**DESCRIPTION**	**PART #**	**QTY**
1	Plate, Engine Adjustment	0262070	1		8	Battery Cable, Red	0315006	1
2	Bed Knife, Vertical	0405108	1		9	Terminal Lugs	0315022	4
3	Bed Knife, Horizontal	0405107	1		10	Battery, 12-Volt	0336008	1
4	Housing, Impeller, Lower Frame	0228228	1		11	Trailer Light Kit	0361006	1
5	Battery Box	0280034	1		12	Axle, Tor-Flex, Idler	0302082	1
6	Battery Clamp	0410028	1		13	Lug Nuts	0338306	10
7	Battery Cable, Black	0315006	1		14	Tire/Wheel Assembly	0354088	2
					Fuel Tank (Not Shown) After S/N 3158		0352102	1

DRAWING # 2

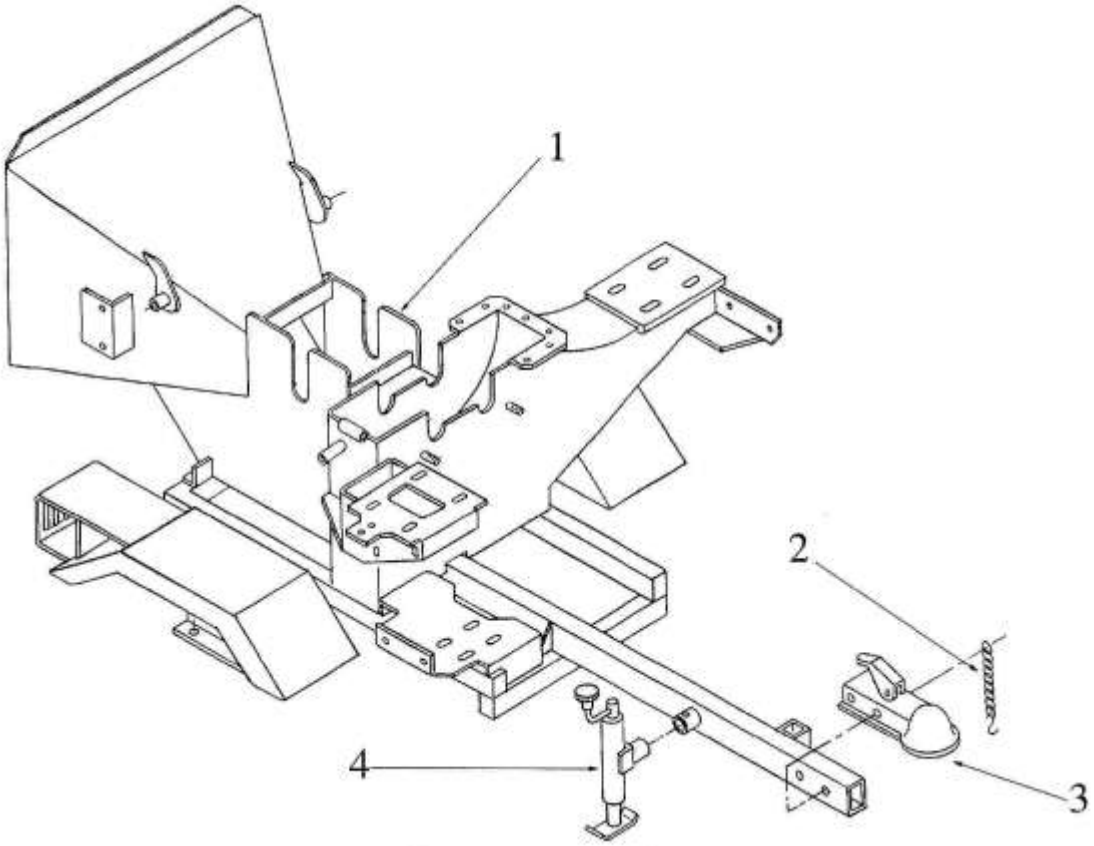

DRAWING # 2								
ITEM #	**DESCRIPTION**	**PART #**	**QTY**		**ITEM #**	**DESCRIPTION**	**PART #**	**QTY**
1	Housing, Impeller/Lower Frame	0228228	1		3	Coupler, 2" Ball	0325007	1
2	Chain, Safety	0309018	2		4	Jack, Topwind 2,000-lb Capacity	0369006	1

DRAWING # 3

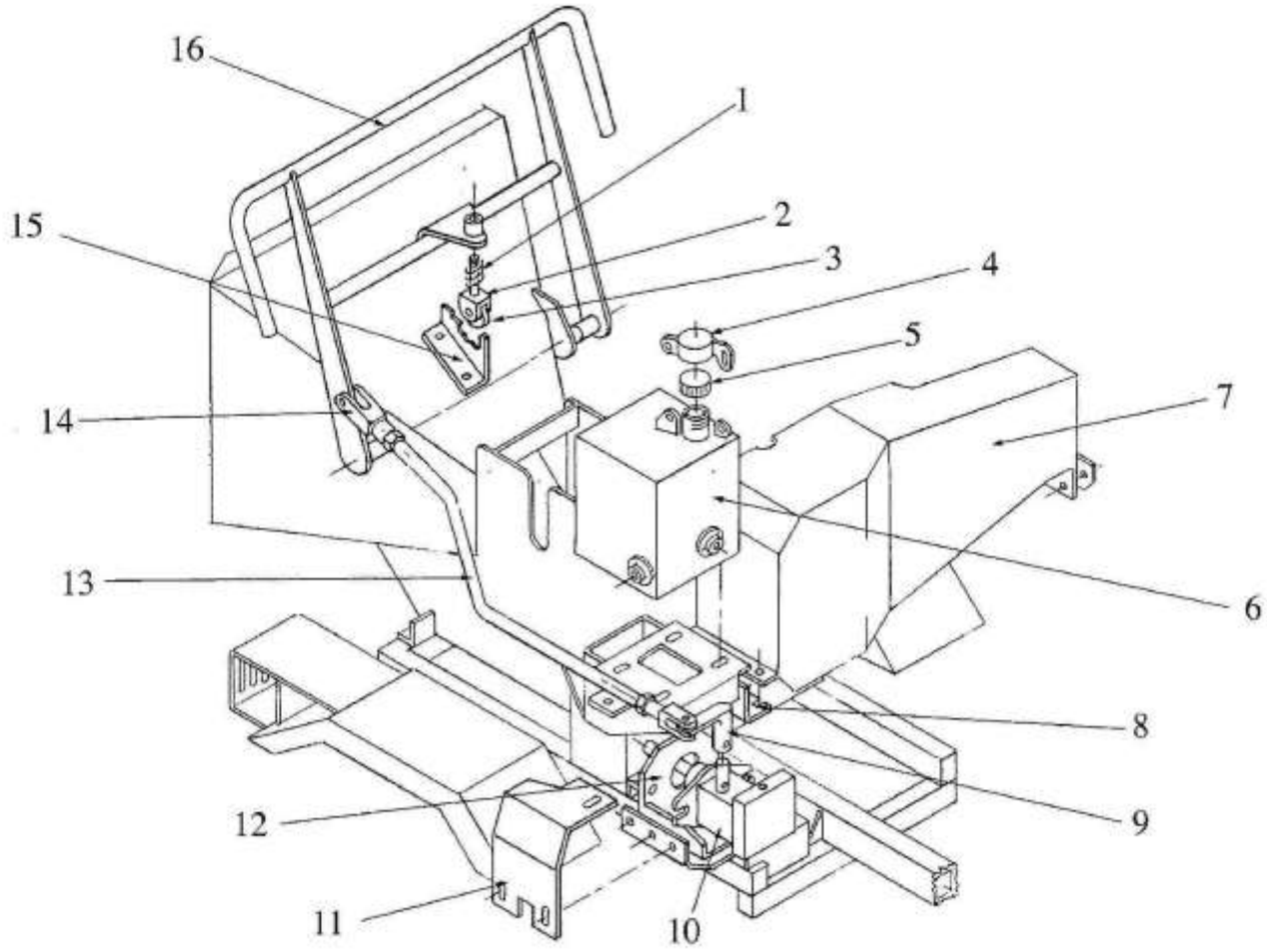

PLEASE PROVIDE MODEL # AND SERIAL # WHEN ORDERING THESE PARTS.

DRAWING # 3								
ITEM #	**DESCRIPTION**	**PART #**	**QTY**		**ITEM #**	**DESCRIPTION**	**PART #**	**QTY**
1	Spring, Compression	0350013	1		9	Lever, Hydraulic Pump	0233150	1
2	Yoke, Detent Bearing	0274007	1		10	Hydraulic Pump	0330021	1
3	Bearing, Ball	0303034	1		11	Guard, Hydraulic Pump	0421366	1
4	Cap, Oil Fill Locking	0252080	1		12	Mount, Hydraulic Pump	0476425	1
5	Fuel, Cap	0371061	1		13	Rod, Hydraulic Pump Actuator	0245137	1
6	Tank, Hydraulic Oil	0252080	1		14	Yoke End Kit	0374020	2
7	Guard, Engine Belt	0221365	1		15	Plate, Detent	0462031	1
8	Bracket, Engine Guard	0406647	1		16	Handle, Power Feed	0223106	1
					Fuel Tank (Not Shown) After S/N 3158		0352102	1

Rev. 09/19/2008

DRAWING # 4

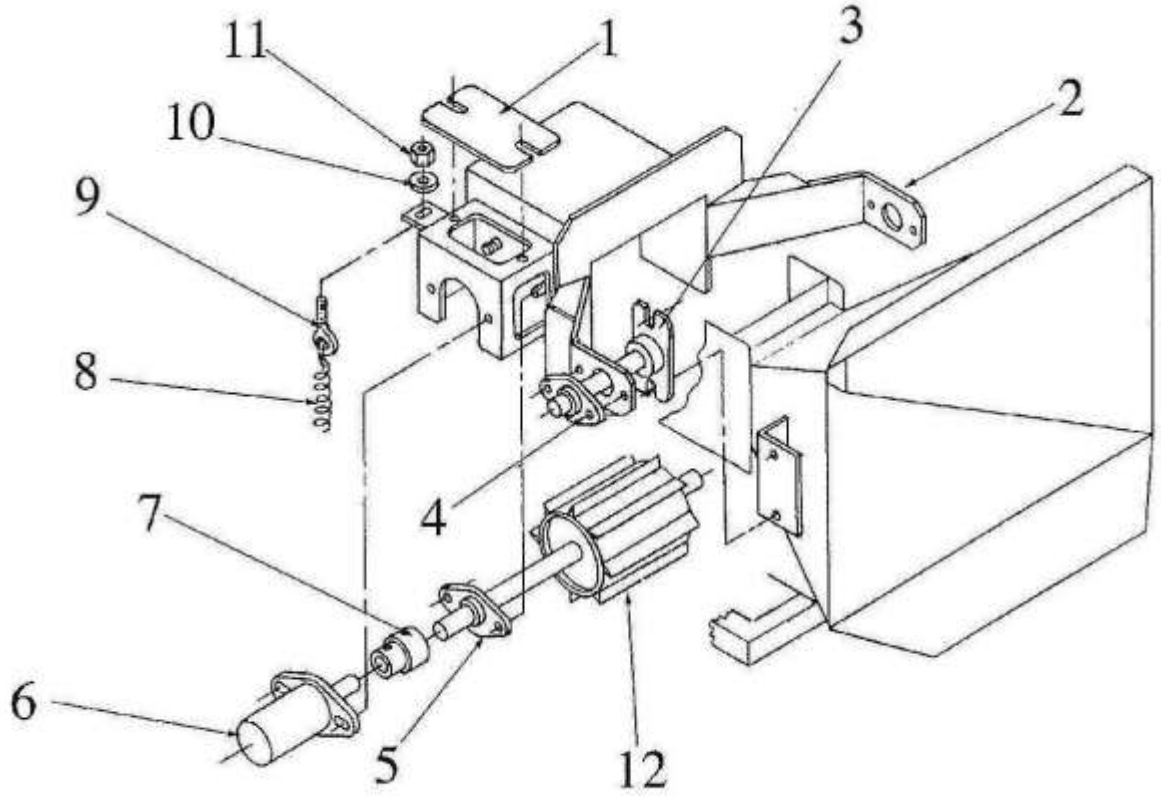

PLEASE PROVIDE MODEL # AND SERIAL # WHEN ORDERING THESE PARTS.

DRAWING # 4								
ITEM #	**DESCRIPTION**	**PART #**	**QTY**		**ITEM #**	**DESCRIPTION**	**PART #**	**QTY**
1	Cover, Drive Motor Access	0471209	1		7	Coupling, Power Feed Roll	0213062	1
2	Yoke, Feed Roll	0274028	1		8	Spring, Extension	0350018	2
3	Post, Yoke Pivoting	0278020	2		9	Eye Bolt	0346860	2
4	Bearing, 2-Bolt Flange, 1" Bore	0303018	2		10	Flat Washer	0353113	4
5	Bearing, 2-Bolt Flange, 3/4" Bore	0303031	2		11	Hex Nut	0338003	4
6	Hydraulic Drive Motor	0330058	1		12	Feed Roll	0254087	1

Rev. 09/19/2008

DRAWING # 5

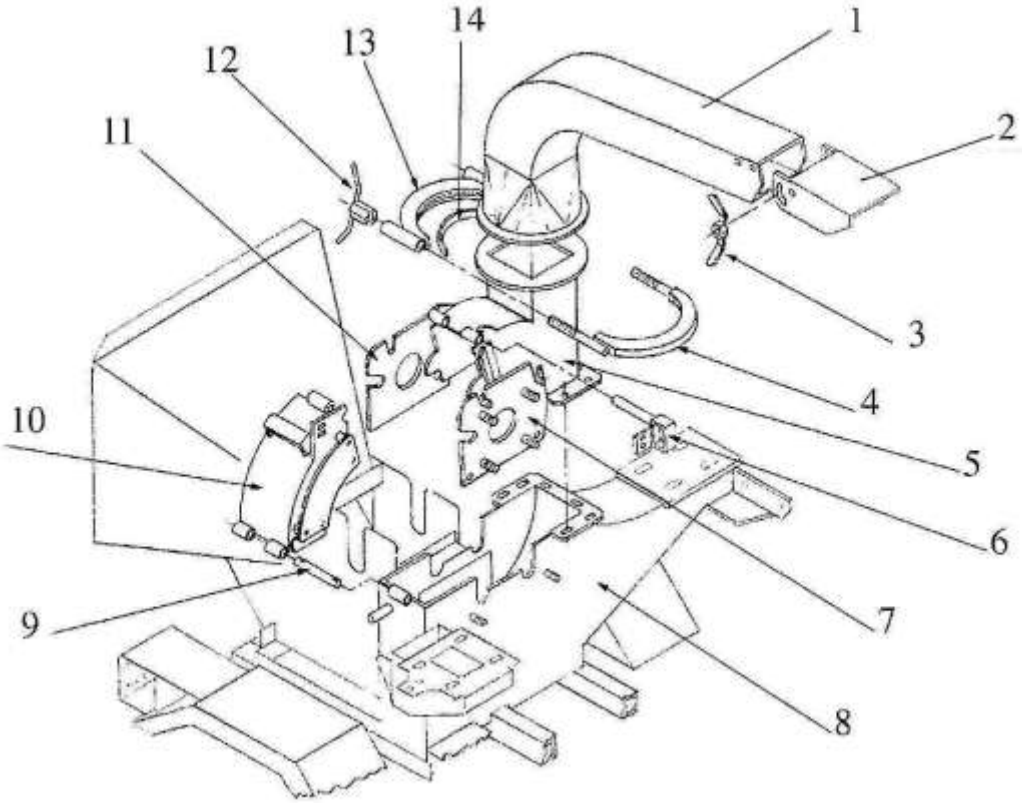

PLEASE PROVIDE MODEL # AND SERIAL # WHEN ORDERING THESE PARTS.

DRAWING # 5								
ITEM #	**DESCRIPTION**	**PART #**	**QTY**		**ITEM #**	**DESCRIPTION**	**PART #**	**QTY**
1	Chute, Exhaust	0226129	1		8	Housing, Impeller/Lower Frame	0228228	1
2	Chute, Exhaust Deflector	0426131	1		9	Pin, Housing Hinge	0440097	1
3	Wing Nut	0238500	1		10	Housing, Impeller	0228224	1
4	Clamp, Front Half	0210123	1		11	Mount, Impeller Bearing, Rear	0276423	1
5	Housing, Impeller, Upper Fixed	0228223	1		12	Wing Nut, 1/2-13	0238504	2
6	Pin, Housing Locking	0240095	1		13	Clamp, Rear Half	0210124	1
7	Mount, Impeller Bearing, Front	0276422	1		14	Teflon Strip		2

Rev. 09/19/2008

DRAWING # 6

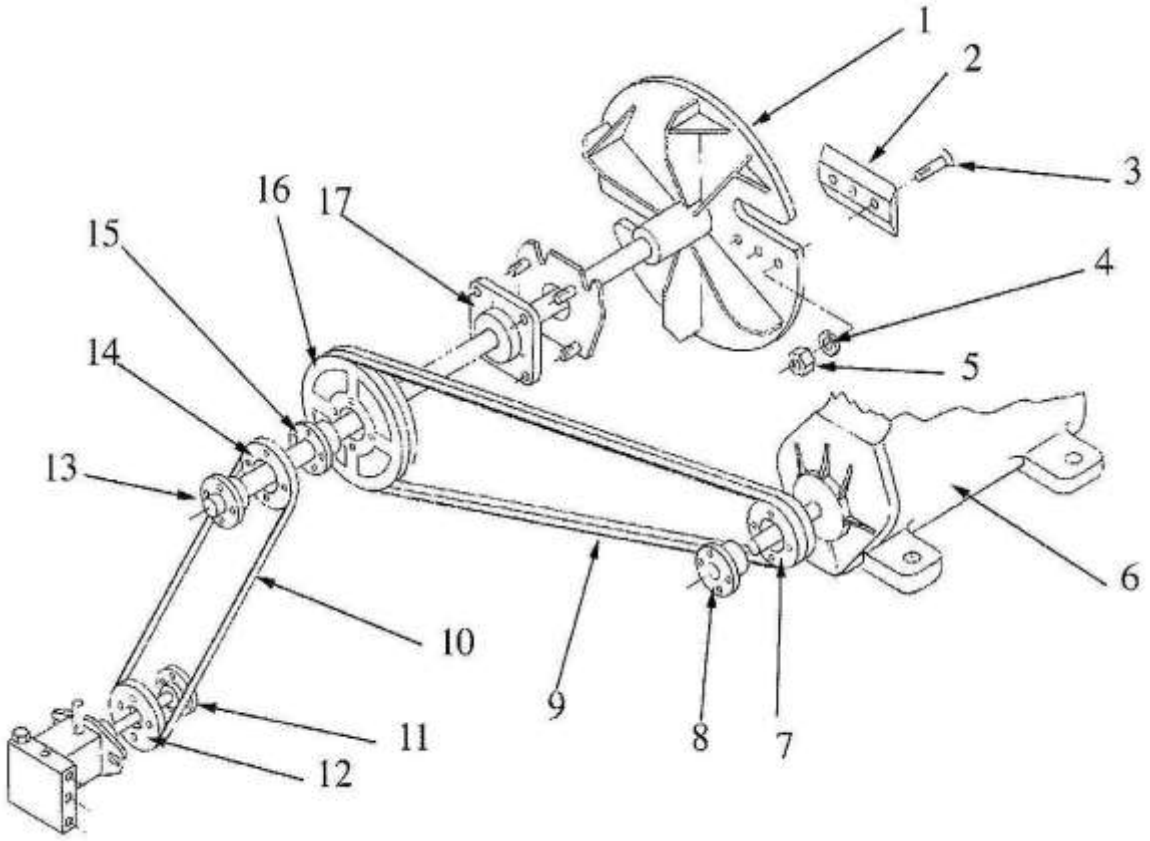

PLEASE PROVIDE MODEL # AND SERIAL # WHEN ORDERING THESE PARTS.

DRAWING # 6							
ITEM #	**DESCRIPTION**	**PART #**	**QTY**	**ITEM #**	**DESCRIPTION**	**PART #**	**QTY**
1	Shaft, Impeller	0248177	1	9	V-Belt, Impeller to Engine	0304142	1
2	Blade, Chipper	0305047	2	10	V-Belt, Impeller to Pump	0304058	1
3	Screw, Flat Head	0346487	6	11	Bushing, 15MM, Pump	0342067	1
4	Lock Washer	0353017	6	12	Sheave, MSK, Pump	0342203	1
5	Stover Nut	0338154	6	13	Bushing, 2 MSK	0342067	1
6	Engine - See Item # 8		1	14	Sheave, Impeller to Pump	0342085	1
7	Sheave, SDS Engine	0342204	1	15	Bushing, SK-2	0342060	1
8	Bushing, Engine - Kawaski 28hp	0342221	1	16	Sheave, SK, Impeller	0342153	1
	Bushing, Engine - Kohler & B&S 16hp	0342007	1	17	Bearing, 4-Bolt, Flange	0303059	2
	Bushing, Engine - Kohler 25hp	0342055	1				
	Bushing, Engine - Kohler 21hp	0342007	1				
	Bushing, Engine - Kohler 20hp	0320455	1				

Rev. 09/19/2008

DRAWING # 7

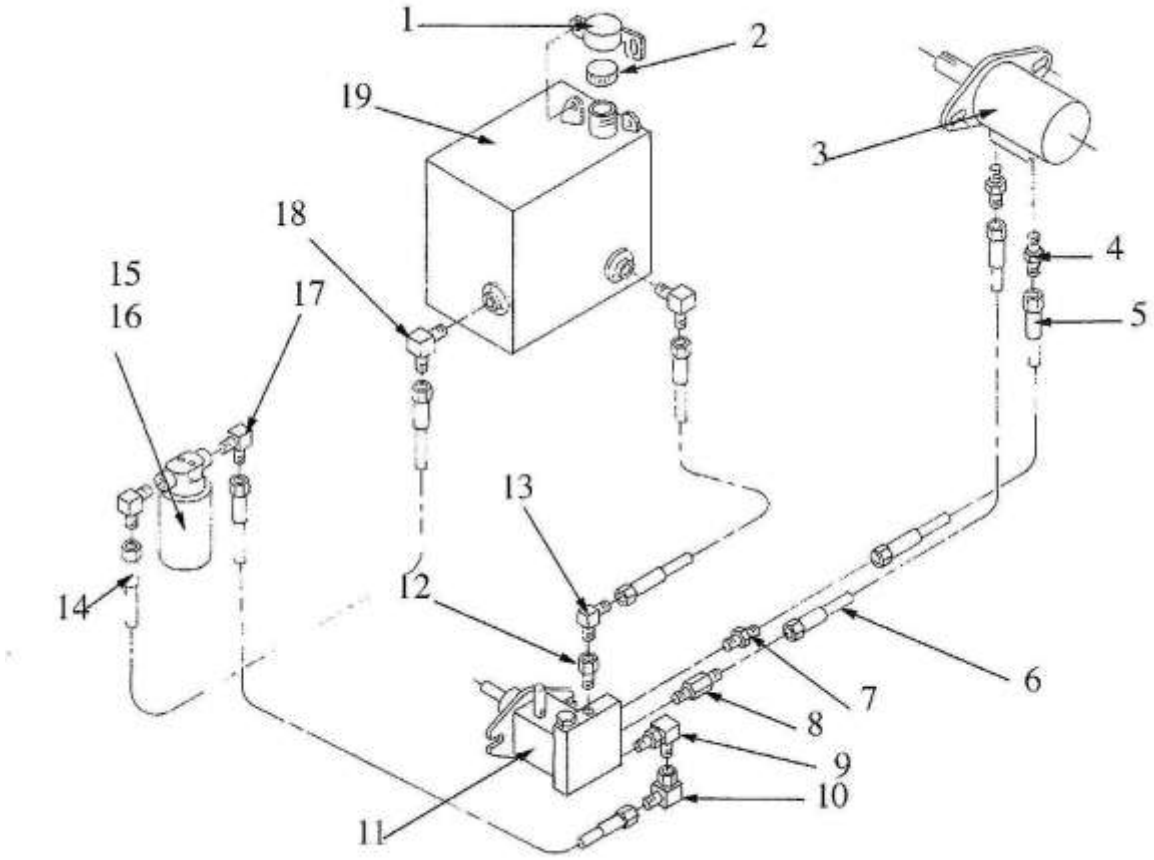

PLEASE PROVIDE MODEL # AND SERIAL # WHEN ORDERING THESE PARTS.

DRAWING # 7								
ITEM #	**DESCRIPTION**	**PART #**	**QTY**		**ITEM #**	**DESCRIPTION**	**PART #**	**QTY**
1	Cap, Oil Fill, Lock	0271024	1		11	Pump, Hydraulic	0330021	1
2	Cap, Fuel	0371061	1		12	Adapter, Bushing, Pump	0317058	1
3	Hydraulic Drive Motor	0330058	1		13	Adapter, 90 Degree, Pump	0317069	1
4	Motor Adapter, Straight	0317054	2		14	Hose, Tank, Filter, Pump	0327036	1
5	Hose, Pump to Motor	0327190	1		15	Hydraulic Filter	0318023	1
6	Hose, Pump to Motor	0327230	1		16	Hydraulic Filter with Housing	0318022	1
7	Adapter, Straight	0317030	1		17	Adapter, 90 Degree Filter	0317040	2
8	Adapter, O-Ring	0317088	1		18	Adapter, 90 Degree Tank	0317052	2
9	Adapter, 90 Degree, O-Ring/Flare	0317064	1		19	Tank, Hydraulic Oil	0252080	1
10	Adapter, 90 Degree, Swivel	0317055	1					

Below is a quick reference chart for various “Flat Head Cap Screws” and the torque recommendations.

VALUES ARE STATED IN FOOT POUNDS

BOLT SIZE	Thds Per Inch	SAE Grade 5	SAE Grade 8
¼	20 28	10 ---	14 ---
5/16	18 24	19 ---	29 ---
3/8	16 24	33 ---	47 ---
7/16	14 20	54 ---	78 ---
½	13 20	78 ---	119 ---
9/16	12 18	114 ---	169 ---
5/8	11 11	154 ---	230 ---
¾	10 10	257 ---	380 ---
7/8	9 9	382 ---	600 ---
1	8 8	587 ---	700 ---

Drive Belt Tension Measurement by Deflection

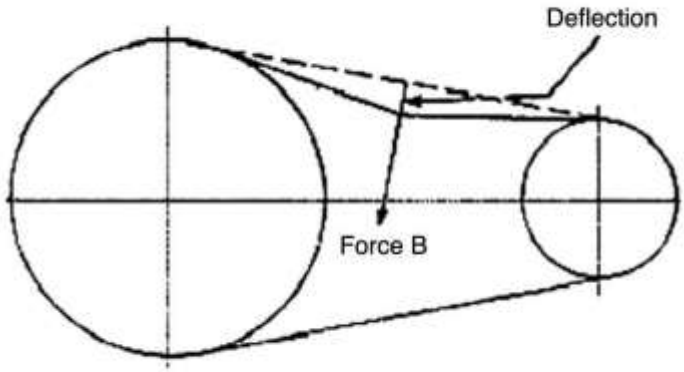

Deflection should be 3/8" when 8-12 lbs. push is applied at "B"

WARRANTY POLICY

Please remember to complete and return your Warranty Card and Dealer Delivery Report. Warranty Claims will not be considered if the Warranty Card and Dealer Delivery Report have not been returned to Salsco.

Your Salsco Commercial or Turf Equipment product is a commercial type product and is normally manufactured and sold for commercial or industrial use. **Salsco will, for the original purchaser, for one (1) year from the date of purchase (90 days if used for rental purposes) repair or replace, free of charge, any SALSCO part or parts found to be defective in material, workmanship or both**. Any transportation or shipping charges will be borne by the purchaser. If, during the warranty period stated above, the product does not function properly due to defect, simply contact Salsco and follow the Warranty Procedures included in this manual.

This warranty **does not** include:

- Incidental or consequential damages and is exclusive of any implied warranties.
- Normal maintenance parts, including, but not limited to hoses, chains, belts, filters, lubricants, etc.
- Parts or components, which are covered under the original manufacturer warranty, including, but not limited to engines, pumps, and motors.

WARRANTY PROCEDURE

In order for Salsco to consider your warranty claims in a timely manner you must follow the simple procedures listed below:

MACHINE OR PART FAILURE

a) Call our service department for helpful instruction on how to correct or repair the problem. Preventive maintenance will also be suggested.

b) When ordering parts for Warranty issues, you MUST retain possession of the old parts in question until notified with respect to returning the parts to Salsco or other disposition.

c) Warranty Claims MUST be filed within 30-days from completion of the work performed. Contact our office for an electronic warranty claim form.

d) Fill in all information requested on warranty claim form, a copy of which is included in this manual, (date of purchase, company name, address, etc.). List all parts used. Make sure part numbers are correct. You can obtain these from your manual. (include good description of problem; i.e. "leaking from spool" rather than "leaking").

e) It is our goal to consider and reach a disposition on each Warranty Claim within 30-days from the date that it is received. Therefore it is important that you respond promptly to any request for further information. Claims with no response to inquiries will be closed as "**denied for lack of response**" 90-days from the date of request.

f) Email, Fax or Send Warranty Claim form to our Warranty Department. – **Warranty on parts most often requires return of the parts that were replaced.** DO NOT DISCARD OLD PARTS UNTIL YOU HAVE RECEIVED A DETERMINATION AS TO WHETHER THESE PARTS MUST BE RETURNED.

g) Our Warranty Department will contact and instruct you on how to return the Parts to Salsco on an RA #. Returns MUST be made within 30-Days from issuance of RA #. **FREIGHT CHARGES ON RETURN OF PARTS IS THE RESPONSIBILITY OF THE CUSTOMER.** Normal pre-delivery adjustments are not covered under warranty. Labor Warranties are based on reasonable time allowances as determined by Salsco, Inc. and paid at 75% of posted labor rate. **TRAVEL TIME IS NOT REIMBURSED UNDER THE WARRANTY POLICY.**

h) Be sure to put the RA form inside the box that you are shipping back, also be sure to put on the outside of the box "Return of Goods" and the RA #.

i) Ship returns via a traceable method such as UPS Ground Service. Be sure that the shipment is insured for the appropriate value. If uninsured parts are lost, we cannot issue a credit.

PLEASE NOTE: ***Warranty forms should be filled out completely.***

PREVENTIVE MAINTENANCE IS YOUR BEST INSURANCE AGAINST EQUIPMENT FAILURE. BE SURE TO READ THIS MANUAL, ESPECIALLY THE MAINTENANCE, OPERATING AND CAUTION SECTIONS.

SALSCO, INC., 105 School House Rd.
Cheshire, CT 06410
800-872-5726, 203-271-1682
203-271-2596 (Fax)
sales@salsco.com, www.salsco.com

WARRANTY CLAIM FORM

SALSCO, INC.
105 School House Rd.
Cheshire, CT 06410

Phone:(203) 271-1682,(800) 872-5726
Fax: (203) 271-2596
Email: s.clark@salsco.com
Website: www.salsco.com

END OWNER **Date Submitted:**

Name:	Phone:	**Work Order #:**
Email:	Fax:	**Office Use Only**
Address:		**Date Rec'd**
		Cust ID:
		Salsco WC
		Salsco RA
PURCHASED FROM		**Date Approved:**
Name:	Phone:	**Date Rejected:**
Email:	Fax:	**Processed By:**
Address:		**Dlr. Del Report on File:** YES NO
		Warranty Card on File: YES NO
		Part(s) Total:
Equipment/Warranty Information (Must be complete)		**Labor Total:**
Purchase Date: Invoice #	Date Failed:	**Total Approved:**
Model #: Serial #	Repair Date:	**Approved/Rejected:**
		Name:
Hrs Used: Primary Use:		**Reason for Rejection:**
Warranty Claim/Work Order#:		
Was a Salsco Return Authorization # issued for repairs or		
Return of Parts? YES NO		**Suggested Preventative Maint:**
Probable Cause of Failure:		

Work Performed/Comments on Repair:								
Shop Labor Rate:						**Submitted By:**		
Total Labor Hours to Repair:						**Printed Name:**		
Parts Required for repair								
Salsco Part #: Description:						Qty.	Price Each	Total	Inv #
								$	
								$	
								$	
								$	

Fill in all information requested on warranty claim form.

INCOMPLETE FORMS CANNOT BE PROCESSED & WILL BE RETURNED

List all parts used. Make sure part numbers are correct. Any parts that you believe to be defective or any parts that break should be retained for possible inspection until after the warranty has been paid or part has been replaced.

SERVICE RECORD

If kept properly, this schedule will help track problems in the future.

Date	Qty.	Part #	Description of Work Done	Hours Used	Total Hours to Date

MODEL # _____ S/N_____

DATE PURCHASED:_____